MATERIALS LIST		
ITEMS	DESCRIPTION	NOTES
A	PTB-300 TOTE BARREL	
B	5 1/2" THREADED LID	

NOTES:

1. TANK IS MANUFACTURED TO ASTM-D-1998 STANDARD.
2. ALL DIMENSIONS ARE APPROXIMATE.

TOP VIEW

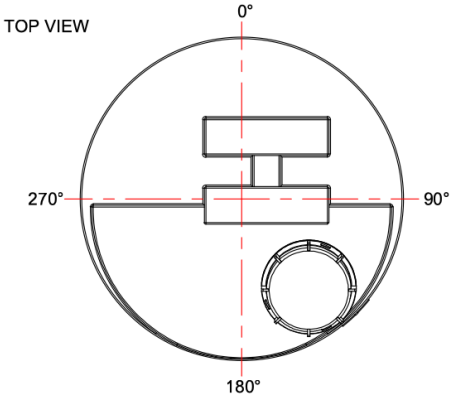

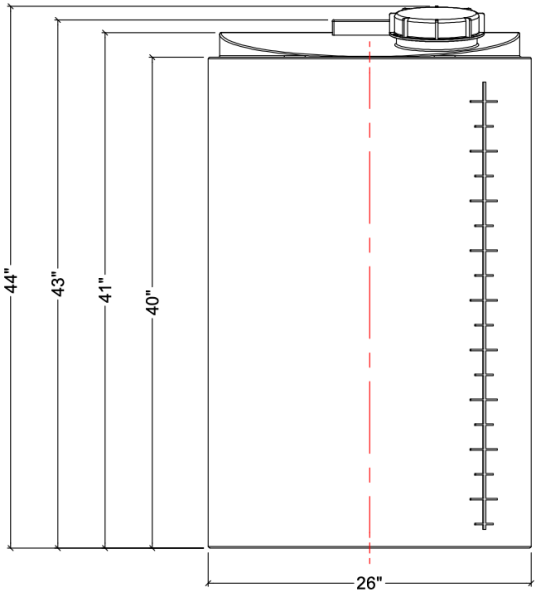

FRONT VIEW

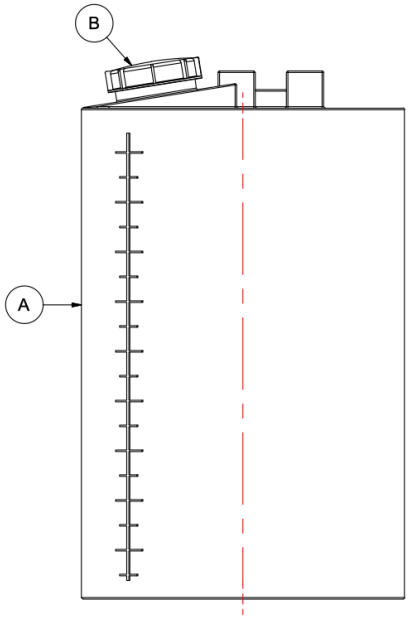

SIDE VIEW

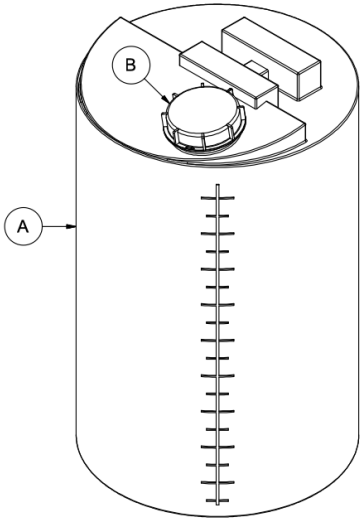

REV	DATE	DESCRIPTION	BY	APPD	REVD

REVISIONS

CUSTOMER

TITLE
300 L TOTE BARREL

ACO JOB NO:
PURCHASE ORDER NO:
PURCHASER'S EQUIP. NO:

THIS DRAWING IS THE PROPERTY OF ROTOPLAST INC. AND SHALL NOT BE COPIED OR TRANSFERRED WITHOUT THE WRITTEN CONSENT OF ROTOPLAST INC.

ENGINEERS SEAL

ACO CONTAINER SYSTEMS
DIVISION OF ROTOPLAST INC.
PICKERING - ONTARIO - CANADA

ACO CONTAINER SYSTEMS
DIVISION OF ROTOPLAST INC.
794 MCKAY RD.
PICKERING, ONTARIO, CANADA
TEL. 905-683-8222
FAX 905-683-2969

DESIGNED	
DRAWN	WM
CHECKED	
APPROVED	
SCALE	N.T.S.
DATE	15-03-16

DWG No PTB-300 REV 0